Vapor Stone
RAIL SYSTEMS
A Wabtec company

10 655 Henri-Bourassa Blvd., West
Saint-Laurent (Québec) Canada
H4S 1A1

Tel: 514.335.4200
Fax: 514.335.4231

www.wabtec.com

Regional Transportation District

RTD Denver EMU

Project # 7230

Door System

Neuron Gateway Application Software Requirement Specification

Contract Number	-	CDRL Number	-
		Customer Ref. Number	-

NOTICE
Plans, specifications and engineering data submitted herewith or which may be submitted, remain the property of **Vapor Stone Rail Systems** and shall not be reproduced or altered or used in whole or in part except by express consent of **VSRS**.

AVIS
Les plans, spécifications et données techniques soumis ci-joints, ou qui peuvent être soumis, restent la propriété de **Vapor Stone Rail Systems** et ne doivent pas être reproduits, altérés ou utilisés, totalement ou partiellement, sans le consentement express de **VSRS**.

	Name / Title	Signature / Date
Prepared :	James Kim Software Designer	James Kim 2011-09-28
Verified :	Martin Ouellet, Eng. Software Department Supervisor	2011-09-28
Approved :	Aldo Di Rocco Project Manager	for Aldo Di Rocco 2011-09-28

Document No.	**201111256**	Revision	**1**
		Date (yyyy-mm-dd)	**2011-09-28**

Revision List

Rev.	ECD#	Date	By	Description of changes
1	---	2011-09-28	James Kim	Official release.
0.1	---	2011-09-27	James Kim	Implementing comments from internal inspection I-1842.
0	---	2011-09-22	James Kim	Original issue.

Preface

This Software Requirements Specification (SRS) complies with the requirements of the IEEE Std. 830-1998 and IEEE Std. 1588-2004.

LONWORKS®, LONTALK®, and LONMARK® are registered trademarks of Echelon Corporation.

Table of Contents

Revision List 2
Preface 3
Table of Contents 4
List of Figures 6
List of Tables 7

1 INTRODUCTION 8

1.1 Purpose 8
1.2 Scope 8
1.3 Definitions, Acronyms, and Abbreviations 8
1.3.1 Definitions 8
1.3.2 Acronyms 8
1.4 References 9
1.5 Overview 10

2 OVERALL DESCRIPTION 11

2.1 Product Perspective 11
2.1.1 System Interfaces 12
2.1.2 User Interfaces 12
2.1.3 Hardware Interfaces 12
2.1.4 Software Interfaces 12
2.1.5 Communications Interfaces 13
2.1.6 Memory Constraints 13
2.1.7 Operations 13
2.1.8 Site Adaptation Requirements 13
2.2 Product Functions 14
2.3 User Characteristics 14
2.4 Constraints 14
2.5 Assumptions and Dependencies 15

3 SPECIFIC REQUIREMENTS 16

3.1 External Interfaces 16
3.1.1 Discreet Interface 16
3.1.2 Network Interface 16
3.1.3 SPI Interface 21
3.2 Functions 25
3.2.1 Initialization Function 25
3.2.2 Node Object Function 26
3.2.3 Time Update Function 27
3.2.4 File Transfer Protocol Function 28
3.2.5 Software Version 30
3.2.6 DCU Status 31
3.2.7 SCI Update Function 32
3.2.8 SPI Media Access Function 33
3.2.9 Network Health Monitoring Function 34
3.2.10 Location Identification Function 35
3.2.11 Power-On Self-Test Function 36
3.2.12 LonWorks Media Access Function 37
3.2.13 LonMark Interoperability Function 38
3.3 Performance Requirements 39
3.3.1 Static Numerical Requirements 39
3.3.2 Dynamic Numerical Requirements 39
3.4 Logical Database Requirements 39
3.4.1 CRC Database 39

3.4.2 Version Database 40
3.5 Design Constraints 41
3.5.1 Standards compliance 41
3.5.2 Databases validation 41
3.6 Software System Attributes 41
3.6.1 Reliability 41
3.6.2 Availability 41
3.6.3 Security 41
3.6.4 Maintainability 41
3.6.5 Portability 41

APPENDIX A: DCU LOCATION 42

List of Figures

Figure 2-1: Software Product Perspective 11
Figure 2-2: Hardware Interface 12
Figure 3-1: Network Interface Conceptual Diagram 16
Figure 3-2: DCU Node Object 20
Figure 3-3: Ftp_DataWindow Successfully Received 28
Figure 3-4: Ftp_DataWindow Error Recovery (Normal) 29
Figure 3-5: Access Capabilities of Functions over the Checksum Data Entities 39
Figure 3-6: Access Capabilities of Functions over Version Data Entities 40

List of Tables

Table 3-1: Discrete Interface 16
Table 3-2: Network Hardware Interface 16
Table 3-3: LocationID Layout within the Neuron Configuration 17
Table 3-4: LocationID Data Fields 17
Table 3-5: TransceiverParameters Layout within the Neuron Configuration 18
Table 3-6: TransceiverParameters Data Fields 18
Table 3-7: DomainTable Layout 19
Table 3-8: DomainTable Data Fields 19
Table 3-9: SPI_Frame.NGAtoDCU 21
Table 3-10: SPI_Frame.DCUtoNGA 22
Table 3-11: SPI_Frame.NGAtoDCU.ExtraData 23
Table 3-12: SPI_Frame.DCUtoNGA.ExtraData 24
Table 3-13: CRC Database 39
Table 3-14: CRC Database Fields 39
Table 3-15: Version Database 40
Table 3-16: Version Database Fields 40

Table A-1: DCU Location Definition 42

1 INTRODUCTION

This document is the VAP3 Neuron Gateway Application Software Requirements Specifications (SRS) developed by Vapor Stone Rail Systems.

1.1 Purpose

The purpose of this Software Requirement Specification (SRS) is to specify the requirements for the Neuron Gateway Application.

The intended audience is the Vapor Stone Rail Systems software development and maintenance team members of the Hyundai Rotem and the Regional Transportation District.

1.2 Scope

The Neuron Gateway Application (NGA) is a software system in the Door Control Unit (DCU). The NGA interfaces between the DCU Application and the car network.

The NGA reports the status and health of the DCU to the car network. The NGA also receives messages from the car network.

The car network uses LonWorks® product and technology.

1.3 Definitions, Acronyms, and Abbreviations

1.3.1 Definitions

Door Control Panel: A panel installed in each cab, one per train side, used to transmit the train operator door commands to the train lines.

1.3.2 Acronyms

Acronym	Definition
ASCII	American Standard Code for Information Interchange
CD	Collision Detection
CDP	Central Diagnostic Panel
CDT	Central Diagnostic Terminal
CFG	Configuration
CMN	Car Monitoring Network
CPLD	Complex Programmable Logic Device
CRC	Cyclic Redundancy Check
DCP	Door Control Panel
DCU	Door Control Unit
EDF	Event Description File
EEPROM	Electrically Erasable/Programmable Read-Only Memory
FTP	File Transfer Protocol
I/O	Inputs/Outputs
ICD	Interface Control Document
ID	Identification
IEEE	The Institute of Electrical and Electronics Engineers
LED	Light Emitting Diode
MDS	Monitoring and Diagnostic System
N.C.	Not Connected
NGA	Neuron Gateway Application
NLC	No Lan Communication
POST	Power-On Self-Test
QT	Quester Tangent

Acronym	Definition
RAM	Random Access Memory
RQ	Request
RTD	Regional Transportation District
Rx	Reception
SCI	Software Configuration Item
SCPT	Standard Configuration Property Type
SFD	System Functional Description
SFPT	Standard Functional Profile Type
SNVT	Standard Network Variable Type
SPI	Serial Peripheral Interface
SQAP	Software Quality Assurance Plan
SRAM	Static Random Access Memory
SRS	System Requirements Specification
SVVP	Software Verification and Validation Plan
TL	Train Line
TS	Technical Specifications
Tx	Transmission
UNACKD	Unacklowledge
UNVT	User-Defined Network Variable Types
UTC	Coordinated Universal Time

1.4 References

Standards

IEEE Std 830-1998	IEEE Recommended Practice for Software Requirements Specifications, 25 June 1998, IEEE, www.ieee.org
IEEE Std 1016-2009	IEEE Recommended Practice for Software Design Descriptions, July 20 2009, IEEE, www.ieee.org
IEEE Std 1558-2004	IEEE Recommended Practice for Software Documentation for Rail Equipment and Systems, March 23rd 2005, IEEE, www.ieee.org

Vapor Stone Rail Systems Documents

201111185	System Functional Description, RTD Denver EMU Door System, Rev. 3
201111186	Software Configuration Management Plan, Door System, Rev. 1
201111207	Software Project Management Plan, Door System, Rev. 0
201111208	Software Quality Assurance Plan, Door System, Rev. 1
201111254	Software Verification and Validation Plan, Door System, Rev. 0
201111295	Software Design Description, Door System – Neuron Gateway Application, Rev. 0
201111586	Interface Control Document - Serial Peripheral Interface, Rev. 1
S17-01	Software Requirements Specification Template, Rev. 0, 2002-01-15

Quester Tangent Documents

DDN-0432-0080	MDS Car Monitoring Network Interface Control Document, Rev. 01
DDN-0432-0090	Door System Car Monitoring Network Interface Control Document, Rev. 0 – Draft

Echelon Corporation Documents

005-0025-01	File Transfer, LONWORKS Engineering Bulletin, Rev. D, November 1996
---	LonMark SNVT Master List, Version 11, Rev. 2, May 2002
---	LonMark Functional Profile: Node Object – SFPTnodeObject, Version 2.0, May 2004

1.5 Overview

The Software Requirement Specifications (SRS) document describes all inputs into and outputs from the software system. It describes the functionality and the relationship of these I/Os. It further identifies the responses to abnormal situations when processing these inputs and outputs. The SRS specifies the performance requirements and constraint imposed on the design of the Neuron Gateway Application.

Section 1 gives an introduction, definitions, and overview of the SRS.
Section 2 describes the factors that affect the product and its requirements.
Section 3 describes all the inputs/outputs relationship and functionality.

2 OVERALL DESCRIPTION

2.1 Product Perspective

The major purpose of the Neuron Gateway Application (NGA) is to report the operation status of the DCU system over to the Car Monitoring Network, and detect and report failure conditions.

The NGA software has no control capacity over the operation of the doors.

Figure 2-1 and Figure 2-2 show the software perspective and hardware interface.

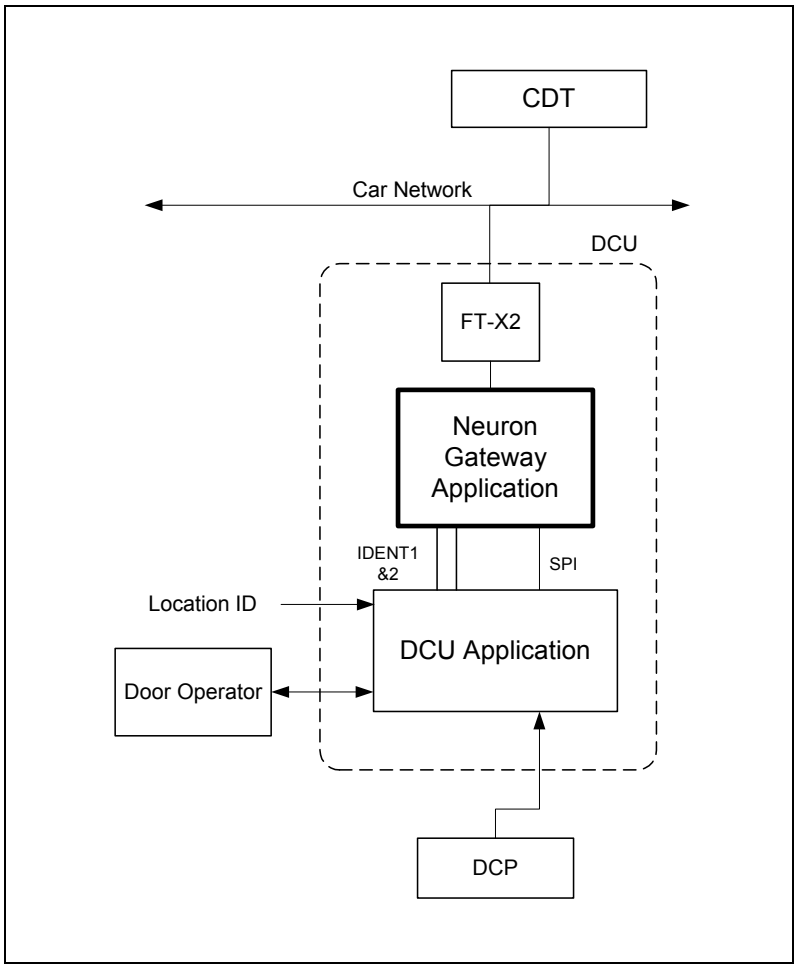

Figure 2-1: Software Product Perspective

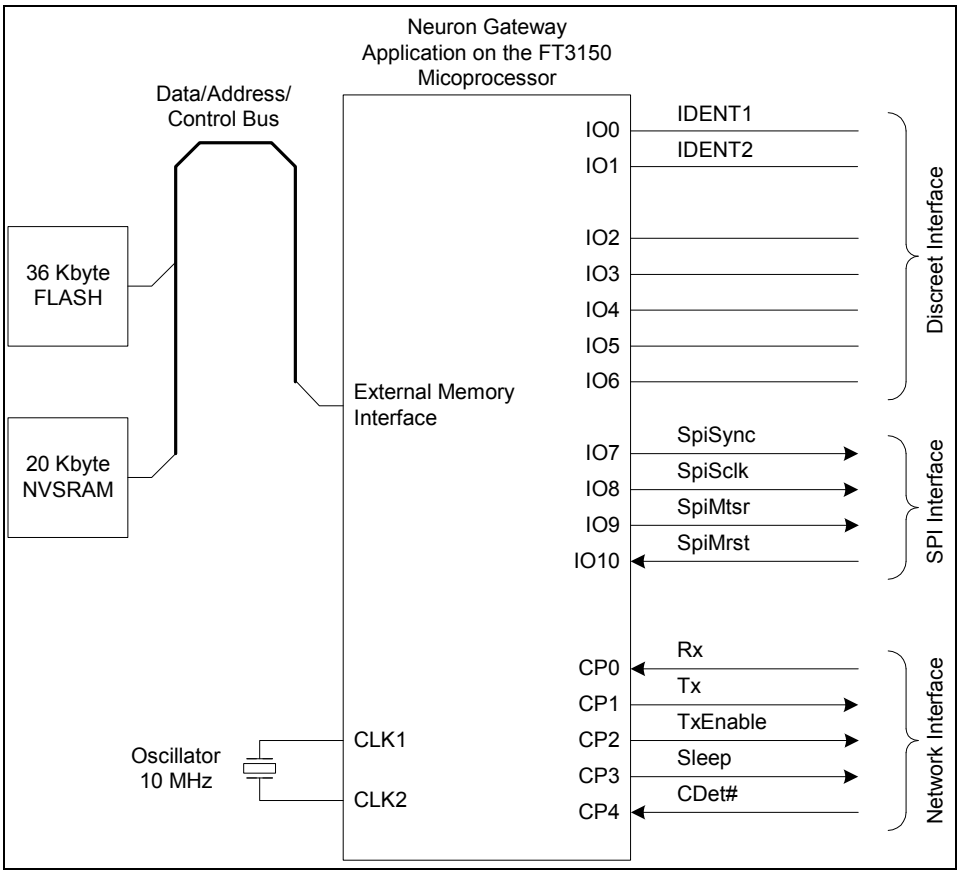

Figure 2-2: Hardware Interface

2.1.1 System Interfaces

NGA is responsible for the bi-directional communication between the DCU and the car Central Diagnostic Terminal.

2.1.2 User Interfaces

There are two LEDs for the user interface:

- SPI LED: Yellow LED blinks when the SPI packet is sent.
- Neuron Service LED: Yellow LED blinks pattern to show the Neuron Gateway Application status.

There is one Service Pushbutton for the user interface.

2.1.3 Hardware Interfaces

There are 2 inputs that are used to determine the 4 different locations of the unit in the car system:

- IDENT1
- IDENT2

2.1.4 Software Interfaces

NGA interfaces with the Neuron firmware that acts as the network operating system. NGA performs self-installation to the network as an independent DCU node associated with the door location.
Both the explicit message and the network variable schemes are used to exchange information with the car network. Some network variables are based on Standard Network Variable Type (SNVT), others on project User-Defined Nework Variable Type (UNVT).

2.1.5 Communications Interfaces

- LONWORKS Communication Interface
  The DCU network interface uses LONWORKS.
- SPI Communication Interface
  The Neuron Gateway Application uses an SPI interface to retrieve the DCU status and pass the network commands to the DCU Application.

2.1.6 Memory Constraints

The following is the memory layout for the Neuron FT3150 CPU:

- 0x0000 thru 0x3FFF: External FLASH reserved for Neuron Firmware.
- 0x4000 thru 0x8FFF: External FLASH for Neuron Gateway Application.
- 0x9000 thru 0xAFFF: External SRAM for Neuron Gateway Application variables.
- 0xB000 thru 0xDFFF: External SRAM to be used for Non-volatile data such as MDS Log.
- 0xE800 thru 0xFFFF: Internal Memory for miscellaneous RAM, EEPROM and I/O.

2.1.7 Operations

Not Applicable.

2.1.8 Site Adaptation Requirements

This section is not applicable.

2.2 Product Functions

The following is a summary of the major functions that the NGA software performs:

- Initialization Function: The DCU is installed at one of the 4 different locations in the car. This function performs the node self-installation based on the detected DCU location in the car.
- Node Object Function: When the CDT requests the node object, the Neuron Gateway Application sends the status of the node object.
- Time Update Function: The UTC time is broadcasted at system startup and each hour, and the DCU updates its time.
- VAP3.4 File Transfer Protocol Function: The VAP3.4 File Transfer Protocol Function provides a way to transfer the Binary software image file.
- VAP3.5 Software Version: The CDT can query for the SCI versions information of the DCU.
- VAP3.6 DCU Status: The DCU updates its status information on the network.
- SCI Update Function: Upon request from the CDT, the NGA can update SCI (only applicable software).
- VAP3.8 SPI Media Access Function: The Neuron Gateway Application communicates with DCU Application through an SPI Interface. This function handles the hardware-level, the level-1, and the level-2 protocols.
- VAP3.9 Network Health Monitoring Function: The NGA monitors the network communication and determines the network health.
- VAP3.10 Location Identification Function: The NGA software identifies its location upon startup.
- VAP3.11 Power-On Self-Test Function: On startup, the Neuron Gateway Application validates its integrity and the Echelon chip functionality.
- VAP3.12 LonWorks Media Access Function: The Neuron Gateway Application connects onto the Car Network through an FT-X2 transceiver.
- VAP3.13 LonMark Interoperability Function: The Neuron Gateway Application provides minimal LONMARK Interoperability.

2.3 User Characteristics

This section is not applicable to this document.

2.4 Constraints

The following lists the factors that limit the software developer's options.

- Software coding standard (see document SQAP #201111208 Section 5 – Standards, Practices, Conventions, and Metrics)
- Design review and code walkthrough (see SQAP document #201111208 Section 6 – Reviews and Audits).
- Restriction on the memory usage 70% of each type
- The programming language used to write the applications shall be the Neuron C programming language.

2.5 Assumptions and Dependencies

The following lists the factors that can affect the requirements stated in this SRS.

- Change in the configuration of the network
- Change in the type of network
- Change in data structures
- Change in data types as enumeration

3 SPECIFIC REQUIREMENTS

3.1 External Interfaces

3.1.1 Discreet Interface

There are 2 discreet inputs as seen in Table 3-1 for detecting its location in the car.

Table 3-1: Discrete Interface

Signal	I/O	Notes
IDENT1	Input	Connected to the IDENT1 for the reading.
IDENT2	Input	Connected to the IDENT2 for the reading.

There are 5 available discret interface IO (as seen in Figure 2-2) that could be used in the future time.

3.1.2 Network Interface

The NGA software interfaces to a 7-layers LONWORKS network.

3.1.2.1 Network Interface Layer 1

Figure 3-1 illustrates the IO used for the Network Interface, and the Table 3-2 explains each IO.

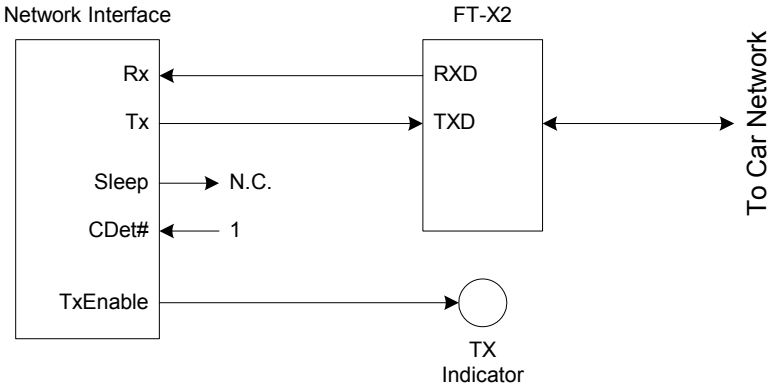

Figure 3-1: Network Interface Conceptual Diagram

Table 3-2: Network Hardware Interface

Signal	I/O	Notes
Tx	Output Serial	Single-ended serial output at 78kbps. Format: Differential Manchester (bi-phase space coding). This scheme provides a transition at the beginning of every bit period for synchronizing the receiver clock. Zero/one data is indicated by the presence or absence of a second transition halfway between clock transitions. A mid-cell transition indicates a zero. Lack of a mid-cell transition indicates a one. See Figure 3-1.
Rx	Input Serial	Single-ended serial input at 78kbps. Format: Differential Manchester. See Figure 3-1.
TxEnable	Output Boolean	This is set to 1 for the entire the duration of a packet transmission. In the DCU, this signal turns-on a “transmission in progress” indicator. See Figure 3-1.

Signal	I/O	Notes
Sleep	Output Boolean	Provides an indication that the Neuron is in low-power standby mode. In the DCU, this output is not connected. See Figure 3-1.
Cdet#	Input Boolean	Collision Detect (active-low). In the DCU, collision detection is not used and this input is connected permanently to 1. See Figure 3-1.

3.1.2.2 Network Interface Layer 2-6

The layers 2-6 are implemented by the Firmware of the Neuron and are not addressed in this software requirements specification. However, the following Layer 2-6 properties are defined for interoperability with the car network.

3.1.2.2.1 LocationID

The LocationID is a structure part of the Neuron configuration and is standard for all Neuron-based nodes. The value of its field however is customized for this project. Its layout is shown in Table 3-3 and its data field defined in Table 3-4.

Table 3-3: LocationID Layout within the Neuron Configuration

	Bit 7 … Bit 0
Byte 2	Loc0
Byte 3	Loc1
Byte 4	Loc2
Byte 5	Loc3
Byte 6	Loc4
Byte 7	Loc5

Table 3-4: LocationID Data Fields

Data	I/O	Notes
Loc0:Loc5	Output String	Location string of the DCU. Format: 6-byte string, each byte is an ASCII characters. Valid values are “DCU 1”, “DCU 2”, “DCU 3”, “DCU 4”, and “XXXXXX”.

3.1.2.2.2 TransceiverParameters

The TransceiverParameters is a structure part of the Neuron configuration and is standard for all Neuron-based nodes. The values of its fields however are customized for this project. Its layout is shown in Table 3-5 and its data field defined in Table 3-6. These configurations establish how the Neuron interfaces with its transceiver and with the network.

Table 3-5: TransceiverParameters Layout within the Neuron Configuration

	Bit 7							Bit 0
Byte 8	com_clk4	com_clk3	com_clk2	com_clk1	com_clk0	in_clk2	in_clk1	in_clk0
Byte 9	com_type2	com_type1	com_type0	com_pd4	com_pd3	com_pd2	com_pd1	com_pd0
Byte 10	preamble_length							
Byte 11	packet_cycle							
Byte 12	beta2_control							
Byte 13	xmit_interpacket							
Byte 14	recv_interpacket							
Byte 15	node_priority							
Byte 16	channel_priority							
Byte 17	CD	bitsync1	bitsync0	filter1	filter0	hysterisis2	histerisis1	histerisis0
Byte 18	cd_ep5	cd_ep4	cd_ep3	cd_ep2	cd_ep1	cd_ep0	cd_t	cdP
Byte 19	0	0	0	0	0	0	0	0
Byte 20	0	0	0	0	0	0	0	0
Byte 21	0	0	0	0	0	0	0	0
Byte 22	0	0	0	0	0	0	0	0
Byte 23	0	0	0	0	0	0	0	0
Byte 24	ngt3	ngt2	ngt1	ngt0	auth	preamp2	preamp1	preamp0

Table 3-6: TransceiverParameters Data Fields

Data	I/O	Notes
com_clk4:0	Output Integer	Shall be 4 for selection of 78.1kbps network rate.
in_clk2:0	Output Integer	Shall be 5 for selection of 10MHz oscillator frequency.
com_type2:0		Specifies the type of transceiver. Shall be 1 for selection of single-ended (like the FTT10-A).
com_pd4:0	Output Integer	Configures the CP4 – CP0 (Tx, Rx, TxEnable, Sleep) pins directions. Shall be 0x0E (14) for direct mode – single-ended.
preamble_length	Output Integer	Length of the preamble for direct mode. Shall be 8 for selection of: ([209…223] + 32*8) * (6 / 10 MHz) = [279…287 µsec].
packet_cycle	Output Integer	Packet cycle for counting backlog. Shall be 5 for the selection of: 1675 * 5 * (6 / 10 MHz) = 5.025 msec.
beta2_control	Output Integer	Determines the *beta2* slot width. Shall be 12 for selection of: (40 + 20*12) * (6 / 10 MHz) = 128 µsec.
xmit_interpacket	Output Integer	Interpacket padding after transmitting. Shall be 14 for selection of: 41 * 14 * (6 / 10 MHz) = 344.4 µsec.
recv_interpacket	Output Integer	Interpacket padding after receiving. Shall be 15 for selection of: 41 * 15 * (6 / 10 MHz) = 369 µsec.
node_priority	Output Integer	Specifies the priority slot number used by the node when sending priority messages. Shall be 0.
channel_priority	Output Integer	Number of priority slots on the network. Shall be 4.
CD	Output Boolean	Collision detection. Shall be 0 for the selection of “do not monitor CP4 (CDet#) for the detection of collision on the network”.
bitsync1:0	Output Integer	Number of logic one bits received that are to be interpreted as the start of a packet indication. Shall be value 0 for the selection of 4 bits.
filter1:0	Output Integer	Filter setting for differential mode transceivers (not applicable to direct mode). Shall be 0.

Data	I/O	Notes
hysterisis2:0	Output Integer	Receive hysterisis filter for differential mode transceivers (not applicable to direct mode). Shall be 0.
cd_ep5:0	Output Integer	CD to end of packet. Shall be 0 as the collision detection is not used.
cd_t	Output Boolean	CD to tail. Shall be 0 as the collision detection is not used.
cdP	Output Boolean	CD Preamble. Shall be 0 as the collision detection is not used.
ngt3:0	Output Integer	Non-group timer. Response or acknowledgement receive timer. Shall be 5 for the selection of 768 msec.
auth	Output Boolean	Network message authentication. Shall be 0 for the selection of “no authentication required”.
preamp2:0	Output Integer	Max. time the node will wait for a free network buffer. Shall be 5 for the selection of 10 seconds.

3.1.2.2.3 DomainTable

The NodeAddress is a configuration property standard for all Neuron-based nodes, it is located in the *Domain Table*. The value of its field however is customized for this project. Its layout is shown in Table 3-7 and its data field defined in Table 3-8.

Table 3-7: DomainTable Layout

	Bit 7							Bit 0
Byte 0	Domain0							
Byte 1	Domain1							
Byte 2	Domain2							
Byte 3	Domain3							
Byte 4	Domain4							
Byte 3	Domain5							
Byte 4	Subnet							
Byte 5	0	NodeID6	NodeID5	NodeID4	NodeID3	NodeID2	NodeID1	NodeID0
Byte 6	DomainLength							

Table 3-8: DomainTable Data Fields

Data	I/O	Notes
Domain0:5	Output String	Variable-length domain id of the DCU. The only valid value is [0, 0, 0, 0, 0, 0].
Subnet	Output Integer	Subnet of the DCU. The only valid value is 1.
NodeID6:0	Output Integer	The DCU node address on the network. Valid values are: 51, 52, 53, 54, 55, 56, and 127.
DomainLength	Output Integer	Length, in bytes, of the variable-length Domain0:5 field. The only valid value is 0.

3.1.2.3 Network Interface Layer 7

Figure 3-2 shows the Layer-7 application interface that the NGA software presents to the network, which includes the network variables (Node Objects) and the explicit messages.

Please refer to the *Door System Car Monitoring Network Interface Control Document (ICD)* #DDN-0432-0090 for the detail of the Network interface.

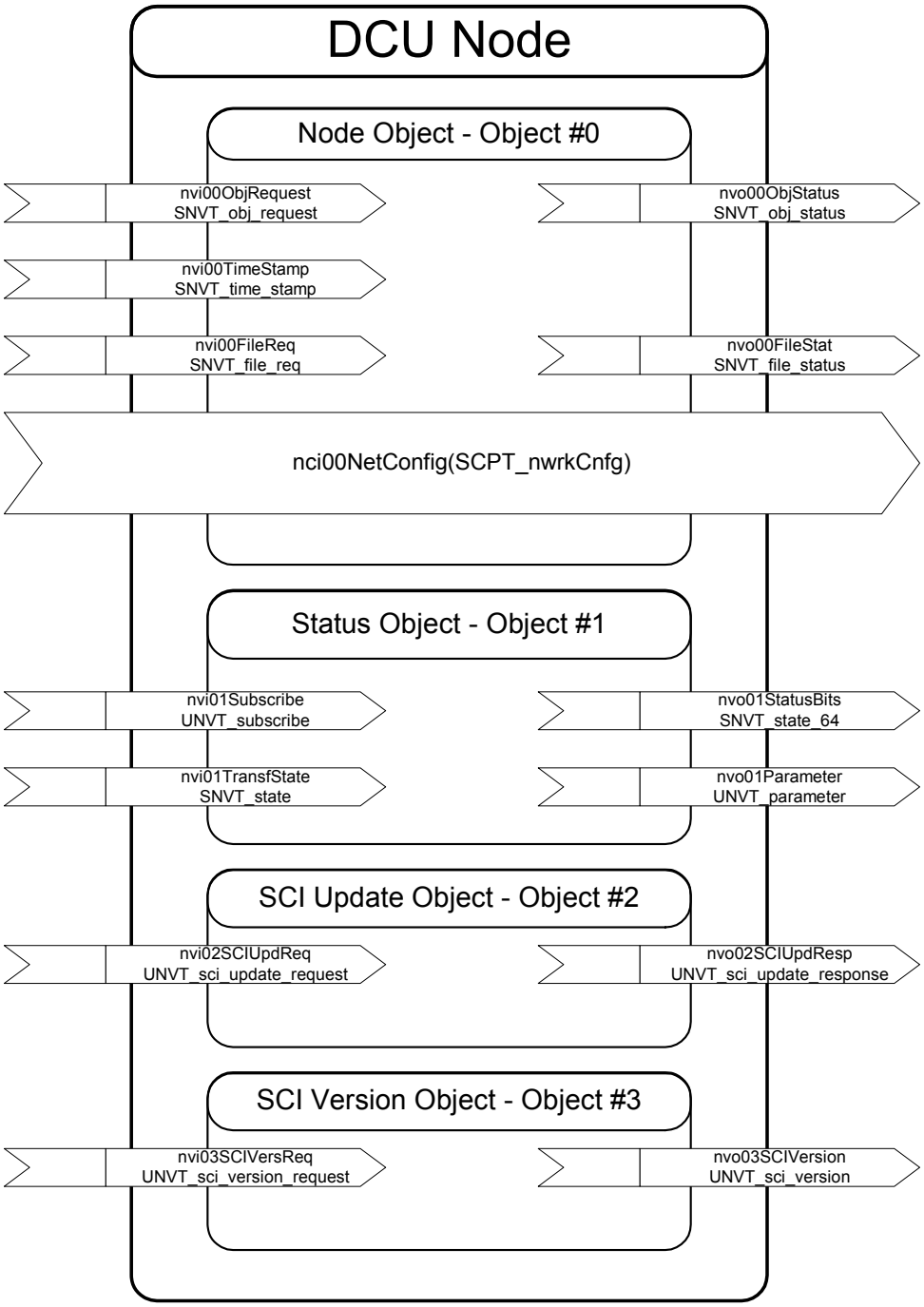

Figure 3-2: DCU Node Object

3.1.3 SPI Interface

Please refer to the *Serial Peripheral Interface (SPI) Interface Control Document (ICD)* #201111586 for the detail of the SPI interface protocol and the description.

Following Table 3-9 and Table 3-10 list the frame for the SPI_Frame.NGAtoDCU and SPI_Frame.DCUtoNGA.

Table 3-9: SPI_Frame.NGAtoDCU

	Bit 7							Bit 0
SYNC	1	0	1	0	1	0	1	0

	MDS_Time Bit 7	Bit 0
Data 0	MDS_Time.year (High byte)	
Data 1	MDS_Time.year (Low byte)	
Data 2	MDS_Time.month	
Data 3	MDS_Time.day	
Data 4	MDS_Time.hour	
Data 5	MDS_Time.minute	
Data 6	MDS_Time.second	

Data 7	LCarID (High byte)
Data 8	LCarID (Low byte)
Data 9	DMCU_Location
Data 10	Spare
Data 11	Spare
Data 12	Spare
Data 13	Spare

	Bit 7							Bit 0
Data 14			NGA_CRC_Fault	-	-	-	-	-
Data 15	LonWorksErr	NLC		IDENTFault	SelfInstallFault	ReceivedTime		SPIErr
Data 16								
Data 17								
Data 18								
Data 19								
Data 20								
Data 21								
Data 22	ExtraDataID_FromNGA							
Data 23	ExtraData_FromNGA							
Checksum	CHK7	CHK6	CHK5	CHK4	CHK3	CHK2	CHK1	CHK0

Table 3-10: SPI_Frame.DCUtoNGA

	Bit 7							Bit 0
SYNC	0	1	0	1	0	1	0	1
Data0	ZeroSpeedPWR	ZeroSpeedRTN	OpenTLCMD	CloseTLCMD	CSOpenCMD	CSCloseCMD	PDETLPWR	PDETLRTN
Data1	PDOPB	DCMLnotNormal	Emergency	NoMotionPWR	DoorCloseStatus	DoorLockStatus	DSRLow	DSRHigh
Data2	MotorCurrent							
Data3	MotorVoltage							
Data4	Obstruction	DCUMajorFail	DCUMinorFail	ReducedSpeed	DisableOpen	DisableClose	Event1	Event2
Data5	3	4	5	6	7	8	9	10
Data6	11	12	13	14	15	16	17	18
Data7	19	20	21	22	23	24	25	26
Data8	27	28	29	30	31	32	33	34
Data9	35	36	37	38	39	40	41	42
Data10	43	44	45	46	47	48	49	50
Data11	51	52	53	54	55	56	57	58
Data12	59	60	61	62	63	64	65	66
Data13	67	68	69	70	71	72	73	74
Data14	75	76	77	78	79	80	81	82
Data15	82	83	84	85	86	87	88	89
Data16	90	91	92	93	94	95	96	97
Data17	Event98	Event99						
Data18								
Data19								
Data20								
Data21								
Data22	ExtraDataID_ToNGA							
Data23	ExtraData_ToNGA							
LChecksum	CHK7	CHK6	CHK5	CHK4	CHK3	CHK2	CHK1	CHK0

The following Table 3-11 and Table 3-12 list the ExtraData for the SPI_Frame.NGAtoDCU and SPI_Frame.DCUtoNGA.

Table 3-11: SPI_Frame.NGAtoDCU.ExtraData

ExtraDataID	ExtraData
0	(Invalid)
1	NA_Crc32 (Byte3)
2	NA_Crc32 (Byte2)
3	NA_Crc32 (Byte1)
4	NA_Crc32 (Byte0)
5	NA_VerMaj
6	NA_VerMin
7	NA_CompileTime_year (High byte)
8	NA_CompileTime_year (Low byte)
9	NA_CompileTime_month
10	NA_CompileTime_day
11	NA_StringDescription0
12	NA_StringDescription1
13	NA_StringDescription2
14	NA_StringDescription3
15	NA_StringDescription4
16	NA_StringDescription5
17	NA_StringDescription6
18	NA_StringDescription7
19	NA_StringDescription8
20	NA_StringDescription9
21	NA_StringDescription10
22	NA_StringDescription11
23	NA_StringDescription12
24	NA_StringDescription13
25 – 255	(Invalid)

Table 3-12: SPI_Frame.DCUtoNGA.ExtraData

ExtraDataID	ExtraData
0	(Invalid)
1	App_Crc32_3
2	App_Crc32_2
3	App_Crc32_1
4	App_Crc32_0
5	Boot_Crc32_3
6	Boot_Crc32_2
7	Boot_Crc32_1
8	Boot_Crc32_0
9	CPLD_Crc32_3
10	CPLD_Crc32_2
11	CPLD_Crc32_1
12	CPLD_Crc32_0
13	App_Version0
14	App_Version1
15	App_Version2
16	App_Version3
17	App_Version4
18	App_Version5
19	Boot_Version0
20	Boot_Version1
21	Boot_Version2
22	Boot_Version3
23	Boot_Version4
24	Boot_Version5
25	CPLD_Version0
26	CPLD_Version1
27	CPLD_Version2
28	CPLD_Version3
29	CPLD_Version4
30	CPLD_Version5
31	App_StringDescription0
32	App_StringDescription1
33	App_StringDescription2
34	App_StringDescription3
35	App_StringDescription4
36	App_StringDescription5
37	App_StringDescription6
38	App_StringDescription7
39	App_StringDescription8
40	App_StringDescription9
41	App_StringDescription10
42	App_StringDescription11
43	App_StringDescription12

ExtraDataID	ExtraData
44	App_StringDescription13
45	Boot_StringDescription0
46	Boot_StringDescription1
47	Boot_StringDescription2
48	Boot_StringDescription3
49	Boot_StringDescription4
50	Boot_StringDescription5
51	Boot_StringDescription6
52	Boot_StringDescription7
53	Boot_StringDescription8
54	Boot_StringDescription9
55	Boot_StringDescription10
56	Boot_StringDescription11
57	Boot_StringDescription12
58	Boot_StringDescription13
59	CPLD_StringDescription0
60	CPLD_StringDescription1
61	CPLD_StringDescription2
62	CPLD_StringDescription3
63	CPLD_StringDescription4
64	CPLD_StringDescription5
65	CPLD_StringDescription6
66	CPLD_StringDescription7
67	CPLD_StringDescription8
68	CPLD_StringDescription9
69	CPLD_StringDescription10
70	CPLD_StringDescription11
71	CPLD_StringDescription12
72	CPLD_StringDescription13
73	Fault1-8_Attributes
74	Fault9-16_Attributes
75	Fault17-24_Attributes
76	Fault25-32_Attributes
77	Fault33-40_Attributes
78	Fault41-48_Attributes
79	Fault49-56_Attributes
80	Fault57-64_Attributes
81	Fault65-72_Attributes
82	Fault73-80_Attributes
83	Fault81-88_Attributes
84	Fault89-96_Attributes
85	EDF_Version_Maj
86	EDF_Version_Min
87 – 255	(Invalid)

3.2 Functions

3.2.1 VAP3.1 Initialization Function

a) Purpose

The DCU is installed at one of the 4 different locations in the car. This function performs the node self-installation based on the detected DCU location in the car.

b) Data

Source	Input
SPI Output Data Fields	DCU_Location

Destination	Output
LocationID Data Fields	Loc0:Loc5
DomainTable Data Fields	Domain0:5
DomainTable Data Fields	Subnet
DomainTable Data Fields	NodeID6:0
DomainTable Data Fields	DomainLength
Node Documentation	Node Self-Documentation String
All Objects	Network Variable Properties

c) Processing

- VAP3.1.1 NGA shall set the Loc0:5 based on its physical location in the car (valid values: “DCU 1”, “DCU 2”, “DCU 3”, and “DCU 4”).
- VAP3.1.2 NGA shall set the Domain0:5 value to zero, Subnet value to 1, DomainLength value to 0, and the node number based on its DCU_Location (DCU1~DCU4: 17 ~ 20).
- VAP3.1.3 NGA shall set the ProgId0:7 value to “DCU”.
- VAP3.1.4 NGA shall set the node self-document string to “DCU, Vapor, PPPP, DDDD” (where PPPP is supplier part number and DDDD is Neuron SCI revision date)
- VAP3.1.5 NGA shall set the *Network Variable Index* and the *Sender/Receiver* of all Network Variable Properties based on its DCU_Location.

3.2.2 VAP3.2 Node Object Function

a) Purpose

When the CDT requests the node object, the Neuron Gateway Application sends the status of the node object. QT's *MDS CMN ICD* document #DDN-0432-0080 shows the list of the used requests and the list of the used object status bits.
LonMark's *SNVT Master List* document describes the variable structure SNVT_obj_request and SNVT_obj_status.
LonMark Functional Profile: Node Object (SFPTnodeObject) document describes the object request

b) Data

Source	Input
nvi00ObjRequest	SNVT_obj_request

Destination	Output
nvo00ObjStatus	SNVT_obj_status (only used ones are shown) ▪ invalid_id ▪ invalid_request ▪ out_of_service ▪ comm_failure ▪ report_mask ▪ programming_mode ▪ programming_fail
Functional Blocks	Object #0 - Node Object Object #1 - Status Object Object #2 – SCI Update Object Object #3 – SCI Version Object

c) Processing

- VAP3.2.1 Upon receiving the nvi00ObjRequest, NGA shall send object status:
  - VAP3.2.1.1 Upon receiving RQ_NORMAL, NGA shall return the specified functional block to normal operation. (if the Node Object is specified then all functional blocks are applied.)
  - VAP3.2.1.2 Upon receiving RQ_UPDATE_STATUS, NGA shall update the SNVT_obj_status. (if the Node Object is specified then inclusive-OR of the status bits for all functional blocks are applied)
  - VAP3.2.1.3 Upon receiving RQ_REPORT_MASK, NGA shall set only used bits status to 1. (if the Node Object is specified then inclusive-OR of supported status bits for all functional blocks are applied.)
  - VAP3.2.1.4 Upon receiving RQ_CLEAR_STATUS, NGA shall clear the status bits of the specified functional block. (if the Node Object is specified then all functional blocks are applied.)
- VAP3.2.2 Upon receiving the nvi00ObjRequest, NGA shall verify the object ID and the request:
  - VAP3.2.2.1 Only if the object ID is invalid, then NGA shall set the invalid_id bit to 1.
  - VAP3.2.2.2 Only if the request is invalid, then NGA shall set the invalid_request bit to 1.

3.2.3 VAP3.3 Time Update Function

a) Purpose

The UTC time is broadcasted at system startup and each hour, and the DCU updates its time.
LonMark's *SNVT Master List* document describes the variable structure SNVT_time_stamp and its valid values.

b) Data

Source	Input
nvi00TimeStamp	SNVT_time_stamp

Destination	Output
SPI_Frame.NGAtoDCU	UTC_time

c) Processing

- VAP3.3.1 Upon receiving the nvi00TimeStamp from the car Network, the NGA software shall analyze the network time (year, month, day, hour, minute, second) for validity:
  - VAP3.3.1.1 NGA shall verify the value of the year (valid value: 0, -1, 1990~2100);
    Note: 0 means year not specified and -1 represents NULL date.
  - VAP3.3.1.2 NGA shall verify the value of the month (valid value: 0~12);
    Note: 0 means month not specified.
  - VAP3.3.1.3 NGA shall verify the value of the day in the month (valid value: 0~31);
    Note: 0 means day not specified.
  - VAP3.3.1.4 NGA shall verify the value of the hour (valid value: 0~23);
  - VAP3.3.1.5 NGA shall verify the value of the minute (valid value: 0~59); and
  - VAP3.3.1.6 NGA shall verify the value of the second (valid value: 0~59).
- VAP3.3.2 If the Network Time Stamp is in valid range, NGA shall save it to the UTC_time. If invalid, the NGA shall store 1990-01-01 00h00.00.
- VAP3.3.3 Upon reception of the Time Stamp, NGA shall set the ReceivedTime (SPI_Frame.NGAtoDCU) = 1 for the duration of *two* Level-1 Protocol frame, and then return to 0. See also the VAP3.8 SPI Media Access Function in section 3.2.8.

3.2.4 VAP3.4 File Transfer Protocol Function

a) Purpose

The VAP3.4 File Transfer Protocol Function provides a way to transfer the Binary software image file. LonMark's *SNVT Master List* document describes the variable structure SNVT_file_req and SNVT_file_status. Note: Generic information about the file transfer protocol itself can be found in the Echelon document 005-0025-01. The requirements herein are the specific requirements for the NGA software.

b) Data

Source	Input
nvi00FileReq	SNVT_file_req
SPI_Frame.NGAtoDCU	NLC

Destination	Output
nvo00FileStat	SNVT_file_status

c) Processing

- VAP3.4.1 NGA software shall always set the number_of_files = 1, and the selected_file = index.
- VAP3.4.2 NGA software shall ignore the receive_timeout.
- VAP3.4.3 NGA shall accept only the file requests from the CDT (nvi00FileReq). For those requests that are not acceptable, NGA shall respond with status = FS_ACCESS_UNAVAIL.
- VAP3.4.4 When NGA receives the FR_DIRECTORY_LOOKUP request with correct file index, it shall respond with the file status = FS_LOOKUP_OK. (if applicable) VAP3.4.5 When the NGA software receives the FR_OPEN_TO_SEND_RA, the FR_OPEN_TO_RECEIVE_RA, the FR_NUL, or an invalid request, then it shall respond with the status = FS_ACCESS_UNAVAIL.
- VAP3.4.6 When NGA receives the FR_OPEN_TO_RECEIVE request with correct file index, then it shall respond with the status = FS_XFER_UNDERWAY. (if applicable)
- VAP3.4.7 When NGA receives the FR_CLOSE_FILE or FR_CLOSE_DELETE_FILE request for any file index, it shall respond with the status = FS_XFER_OK and stop the transfer if in progress.

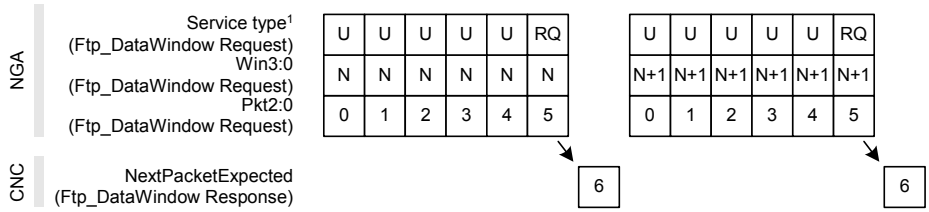

Note 1: Service type U = UNACKD, RQ=Request/Response.

Figure 3-3: Ftp_DataWindow Successfully Received

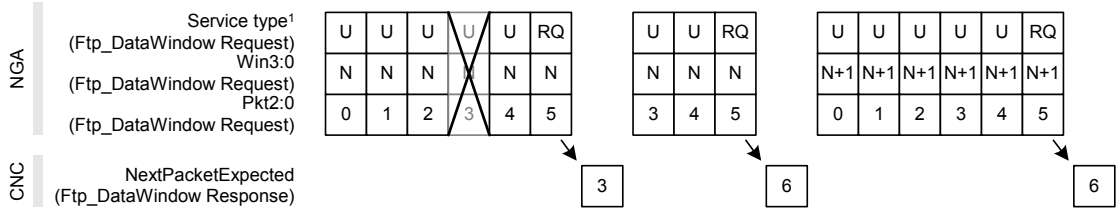

Note 1: Service type U = UNACKD, RQ=Request/Response.

Figure 3-4: Ftp_DataWindow Error Recovery (Normal)

- VAP3.4.8 NGA shall use an Ftp_DataWindow size of 6 and a maximum packet size of 32 bytes.
- VAP3.4.9 When sending its Ftp_DataWindow packets with the Service type = Request/Response, NGA shall set the Transaction timer = tx_timer3:tx_timer0 and the retry3:retry0 = retry3:retry0.
- VAP3.4.10 NGA shall send its variable Length data window packets in Data0 … Data31, indicating its window number in Win3:0, and its packet number in Pkt2:0. See the Figure 3-3.
- VAP3.4.11 NGA shall accept responses from the CDT to its Request/Response Ftp_DataWindow packets in the NextPacketExpected. NGA shall either retransmit packets from the last window or continue with the next window transmission based on the CDT NextPacketExpected response. Upon reception of a NextPacketExpected with an invalid value, NGA shall abort the file transfer and close the file with status = FS_WINDOW_ERR. See the Figure 3-3 and Figure 3-4.
- VAP3.4.12 If the CDT does not respond in time to a Request/Response Ftp_DataWindow packets, or if an UNACKD Ftp_DataWindow packet transmission fails, NGA shall abort the file transfer and close the file with status = FS_TIMEOUT_ERR.
- VAP3.4.13 NGA shall indicate the end of transfer by sending an Ftp_DataWindow packets with its Service type = Request/Response and a Length less than the maximum packet size, even if it means transferring an FtpDataWindow packet with its Length = 1.
- VAP3.4.14 At the end of the transfer, if the CDT does not send FR_CLOSE_FILE within 10 seconds, NGA shall unitarily close the file with status = FS_TIMEOUT_ERR.

3.2.5 VAP3.5 Software Version

a) Purpose

The CDT can query for the SCI versions information of the DCU.
QT's *MDS CMN ICD* document #DDN-0432-0080 describes the variable structure UNVT_sci_version_request and UNVT_sci_version.
The build date of the CPLD is not stored in its binary therefore; its build date will be an empty array.

b) Data

Source	Input
nvi03SCIVersReq	UNVT_sci_version_request
NGA Version Database	NGA Information
SPI_Frame.DCUtoNGA.ExtraData	DCU Application Information
SPI_Frame.DCUtoNGA.ExtraData	Boot Loader Information
SPI_Frame.DCUtoNGA.ExtraData	CPLD Information

Destination	Output
nvo03SCIVersion	UNVT_sci_version

c) Processing

- VAP3.5.1 Upon receiving nvi03SCIVersReq, the NGA shall send the nvo03SCIVersion to the CDT with following variables:
  - VAP3.5.1.1 Upon receiving sci_index of Boot Loader, NGA shall update: sci_index = 1, sci_type = 5, sci_name = "Boot", sci_version = [maximum 8 characters], build_date = [YYYY-MM-DD],
  - VAP3.5.1.2 Upon receiving sci_index of DCU Application, NGA shall update: sci_index = 2, sci_type = 3, sci_name = "App", sci_version = [maximum 8 characters], build_date = [YYYY-MM-DD],
  - VAP3.5.1.3 Upon receiving sci_index of NGA, NGA shall update: sci_index = 3, sci_type = 3, sci_name = "Neuron", sci_version = [maximum 8 characters], build_date = [YYYY-MM-DD],
  - VAP3.5.1.4 Upon receiving sci_index of CPLD, NGA shall update: sci_index = 2, sci_type = 2, sci_name = "CPLD", sci_version = [maximum 8 characters], build_date = [Null].

3.2.6 VAP3.6 DCU Status

a) Purpose

The DCU updates its status information on the network.
QT's *MDS CMN ICD* document #DDN-0432-0080 describes and explains the variable structure UNVT_subscribe and UNVT_parameter.
QT's *Door System CMN ICD* document #DDN-0432-0090 defines individual status bits and parameters of the nvi01StatusBits, nvo01StatusBits2, and nvo01Parameter.
LonMark's *SNVT Master List* document describes the variable structure SNVT_state_64 and SNVT_state.

b) Data

Source	Input
SPI_Frame.DCUtoNGA	Field Variables
nvi01Subscribe	UNVT_subscribe
nvi01TransfState	SNVT_state

Destination	Output
nvo01StatusBits	SNVT_state_64
nvo01StatusBits2	SNVT_state_64
nvo01Parameter	UNVT_parameter

c) Processing

- VAP3.6.1 When NGA receives nvi01TransfState.bit0 = 1, NGA shall stop all transmission of the Object #1 messages.
- VAP3.6.2 NGA shall resume the transmission of all messages of the Object #1 when NGA receives nvi01TransfState. bit0 = 0 or 60s has passed since the last reception of nvi01TransfState.bit0 = 1.
- VAP3.6.3 NGA shall update the nvo01StatusBits (and) with the SPI_Frame.DCUtoNGA.
- VAP3.6.4 By default, NGA shall initially transmit the nvo01StatusBits (and nvo01StatusBits2 if applicable) with the transmission rate of 9s.
- VAP3.6.5 By default, NGA shall not transmit the nvo01Parameter (if applicable).
- VAP3.6.6 When NGA receives nvi01Subscribe with non-zero update_rate:
    - VAP3.6.6.1 NGA shall verify the valid range of the update_rate: multiples of 500ms over a range from 0 to 60,000ms.
    - VAP3.6.6.2 Upon receiving param_id of zero, NGA shall update the transmission rate of the nvo01StatusBits (and nvo01StatusBits2 if applicable) with the update_rate.
    - VAP3.6.6.3 Upon receiving param_id of one, NGA shall update the transmission rate of the nvo01Parameter (if applicable) with the update_rate.
- VAP3.6.7 When NGA receives nvi01Subscribe with zero update_rate:
    - VAP3.6.7.1 NGA shall stop the transmission of the nvo01StatusBits (and nvo01StatusBits2 if applicable) for param_id of zero and nvo01Parameter for param_id of one (if applicable).
    - VAP3.6.7.2 If the transmission rate of param_id is already zero, then NGA shall send the requested "pram_id" once.

3.2.7 VAP3.7 SCI Update Function

a) Purpose

Upon request from the CDT, the NGA can update SCI (only applicable software).
QT's *MDS CMN ICD* document #DDN-0432-0080 describes and explains the variable structure UNVT_sci_update_init and UNVT_sci_update_response.
QT's *Door System CMN ICD* document #DDN-0432-0090 describes nvi02SCIUpdReq, and nvo02SCIUpdResp.

b) Data

Source	Input
nvi02SCIUpdReq	UNVT_sci_update_init

Destination	Output
nvo02SCIUpdResp	UNVT_sci_update_response

c) Processing

- VAP3.7.1 NGA shall accept the file transfer (respond back with "Initiate OK") if there is a sufficient memory space, the car is in stop, the version is valid, and doors are closed and locked.
- VAP3.7.2 NGA shall respond back to CDT with "Install OK" if the integrity of the newly transferred software image is correct.
- VAP3.7.3 NGA shall install transferred software image after responding back to CDT.

3.2.8 VAP3.8 SPI Media Access Function

a) Purpose

The Neuron Gateway Application communicates with DCU Application through an SPI Interface. This function handles the hardware-level, the level-1, and the level-2 protocols.

b) Data

Source	Input
SPI Hardware Interface	SpiMrst
SPI_Frame.DCUtoNGA	SYNC
SPI_Frame.DCUtoNGA	Data

Destination	Output
SPI Hardware Interface	SpiMtsr
SPI Hardware Interface	SpiSck
SPI Hardware Interface	SpiSync
SPI_Frame.NGAtoDCU	SYNC
SPI_Frame.NGAtoDCU	Data0…Data21
SPI_Frame.NGAtoDCU	Chksum
SPI_Frame.NGAtoDCU	SPIErr
Status Database	Bad SPI

c) Processing

- VAP3.8.1 Serial synchronous transmission shall occur on SpiSck and SpiMtsr.

SPI_Frame.NGAtoDCU:

- VAP3.8.2 NGA shall assemble SPI_Frame.NGAtoDCU to be transmitted using the latest values at the time the frame is assembled.
- VAP3.8.3 The transmitted Chksum shall be the sum of the SYNC and Data0 through the Data33 bytes, plus one.
- VAP3.8.4 NGA shall set the SpiSync frame synchronization signal at the beginning of each frame.
- VAP3.8.5 NGA shall periodically send (and thus receive) a frame every 100ms ± 30ms.

SPI_Frame.DCUtoNGA:

- VAP3.8.6 NGA shall decompose the incoming synchronous stream of bytes SPI_Frame.DCUtoNGA.
- VAP3.8.7 Upon reception of a frame with a correct SYNC byte and a correct CHK7:0, NGA shall decompose the data part of the frame. A correct CHK7: 0 should be the summation of the SYNC and Data bytes, plus one.
- VAP3.8.8 Given a frame that does not comply with the SPI_Frame.DCUtoNGA, the data frame shall be disregarded.
- VAP3.8.9 Given a frame that does not comply with the SPI_Frame.DCUtoNGA, NGA shall set the SPIErr of the SPI_Frame.NGAtoDCU to 1, otherwise to 0. The updated status will thus be sent in the next frame.
- VAP3.8.10 If the SPIErr has been 1 for 2.0 seconds consecutively, the SPI Interface status is “bad”, otherwise it is “ok”. Upon NGA startup, the initial status of SPI shall be set to “bad”. This status is used in numerous functions throughout section 3.2 and is referred to “BadSPI”
- VAP3.8.11 Upon reception of valid SPI frames with the valid ExtraDataID in consecutive ascending order of ExtraDataID, NGA shall decompose the ExtraData.

3.2.9 VAP3.9 Network Health Monitoring Function

a) Purpose

The NGA monitors the network communication and determines the network health.

b) Data

Source	Input
TBD	

Destination	Output
SPI_Frame.NGAtoDCU	NLC
SPI_Frame.NGAtoDCU	LonWorksErr

c) Processing

- VAP3.9.1 Upon startup, the No Lan Communication (NLC) shall be 1 by default.
- VAP3.9.2 The NLC shall be 1 when NGA detects the network comunication is down for 60s.
- VAP3.9.3 The NLC shall be 0 when NGA detects the network communication is up again.
- VAP3.9.4 The LonWorksErr shall be 0.

3.2.10 VAP3.10 Location Identification Function

a) Purpose

The NGA software identifies its location upon startup.
The Table A-1 shows the DCU location and the use of the IDENT1 and IDENT2.

b) Data

Source	Input
Discreet Interface	IDENT1 IDENT2

Destination	Output
Network Variable Configuration	DCU Node Selector
Functional Blocks	Object #0 - Node Object Object #1 - Status Object Object #2 – SCI Update Object Object #3 – SCI Version Object

c) Processing

- VAP3.10.1 At startup, NGA shall identify its location by using its Discrete input interface.
- VAP3.10.2 NGA shall identify its location at startup only, ignoring changes that could occur later.
- VAP3.10.3 For valid configurations, NGA shall set the DCU node HI selectors of the Network Variable Configuration as following: DCU1:4 to 0x11;0x14 according to the location read from IDENT1 and IDENT2.
- VAP3.10.4 Upon invalid configuration, NGA shall not transmit any network objects.

3.2.11 VAP3.11 Power-On Self-Test Function

a) Purpose

On startup, the Neuron Gateway Application validates its integrity and the Echelon chip functionality.

b) Data

Source	Input
CRC Database Fields	NGA_Crc15:0
Version Database Fields	NGA_Version0:5

Destination	Output
SPI_Frame.NGAtoDCU	NGA_Crc
SPI_Frame.NGAtoDCU	NGA_VerMaj
SPI_Frame.NGAtoDCU	NGA_VerMin

c) Processing

- VAP3.11.1 NGA performs self-tests at startup:
  - VAP3.11.1.1 NGA shall compute the CRC of the application code, and compare to the stored CRC in NGA_Crc15:0 of the CRC Database Fields.
  - VAP3.11.1.2 NGA shall verify that the Echelon FT3150 chip register functions correctly.
- VAP3.11.2 Upon failure of a self-test, NGA shall place the Neuron in an OFF-LINE state, turning off its discreet outputs, preventing all communications with the SPI, and preventing all high-level functions with the car network.
- VAP3.11.3 If all tests pass, NGA shall report its CRC in NGA_Crc (SPI_Frame.NGAtoDCU), and its software version in NGA_VerMaj and NGA_VerMin (SPI_Frame.NGAtoDCU).

3.2.12 VAP3.12 LonWorks Media Access Function

a) Purpose

The Neuron Gateway Application connects onto the Car Network through an FT-X2 transceiver.

b) Data

Source	Input
Network Hardware Interface	Rx
Network Hardware Interface	Cdet#

Destination	Output
Network Hardware Interface	Tx
Network Hardware Interface	TxEnable
Network Hardware Interface	Sleep
TransceiverParameters Data Fields	com_clk4:0
TransceiverParameters Data Fields	in_clk2:0
TransceiverParameters Data Fields	com_type2:0
TransceiverParameters Data Fields	com_pd4:0
TransceiverParameters Data Fields	preamble_length
TransceiverParameters Data Fields	packet_cycle
TransceiverParameters Data Fields	beta2_control
TransceiverParameters Data Fields	xmit_interpacket
TransceiverParameters Data Fields	recv_interpacket
TransceiverParameters Data Fields	node_priority
TransceiverParameters Data Fields	channel_priority
TransceiverParameters Data Fields	CD
TransceiverParameters Data Fields	bitsync1:0
TransceiverParameters Data Fields	filter1:0
TransceiverParameters Data Fields	hysterisis2:0
TransceiverParameters Data Fields	cd_ep5:0
TransceiverParameters Data Fields	cd_t
TransceiverParameters Data Fields	cdP
TransceiverParameters Data Fields	ngt3:0
TransceiverParameters Data Fields	auth
TransceiverParameters Data Fields	preamp2:0

c) Processing

- VAP3.12.1 NGA shall access the car network through Rx, Tx, and TxEnable of the Network Hardware Interface in single-ended mode at 78.1kbps nominal rate, where the Cdet# of the Network Hardware Interface functions as a collision detection input (however, Cdet# is ignored as the cd_t of the TransceiverParameters Data Fields is set to 0).
- VAP3.12.2 The Sleep output of the Network Hardware Interface is not used by the DCU and can be driven by the NGA in any way it sees.
- VAP3.12.3 NGA shall set the TransceiverParameters Data Fields to the exact values specified in Table 3-6.

3.2.13 VAP3.13 LonMark Interoperability Function

a) Purpose

The Neuron Gateway Application provides minimal LonMark INTEROPERABILITY.

b) Data

Source	Input
nci00NetConfig	SCPTnwrkCnfg

Destination	Output
Memory	Network Configuration

c) Processing

- VAP3.13.1 NGA shall set the config_source of the SCPTnwrkCnfg to the CFG_LOCAL initially.

3.3 Performance Requirements

3.3.1 Static Numerical Requirements

This section is not applicable to this document. All applicable static numerical requirements have been specified in Section 3.1.

3.3.2 Dynamic Numerical Requirements

This section is not applicable to this document. All applicable dynamic numerical requirements have been specified in sections 3.1.

3.4 Logical Database Requirements

3.4.1 CRC Database

The CRC Database shall be assigned to the Non-Volatile memory. NGA_CRC value shall be updated when the NGA_CRC version changes (different from NGA_Version in program memory). The value shall be verified when NGA_Version did not change.

Table 3-14 lists the CRC Database Fields. Figure 3-5 depicts the access capabilities of functions over the data entities. There is no relationship between the different data entities within the database.

Such that the integrity of the database can be maintained even through software version changes (modifications), the database has the following integrity constraints:

- The fields shall be mapped as stated in Table 3-13;

Table 3-13: CRC Database

	Bit 7							Bit 0
Base+0	NGA_Crc15	NGA_Crc14	NGA_Crc13	NGA_Crc12	NGA_Crc11	NGA_Crc10	NGA_Crc9	NGA_Crc8
Base+1	NGA_Crc7	NGA_Crc6	NGA_Crc5	NGA_Crc4	NGA_Crc3	NGA_Crc2	NGA_Crc1	NGA_Crc0
Base+2	NGA_CRC Version 0							
…	…							
Base+7	NGA_CRC Version 5							

Table 3-14: CRC Database Fields

Data Entities	Type	Notes
NGA_Crc15:0	Integer	Neuron Gateway Application CRC. Valid range: 0 – 65,535.

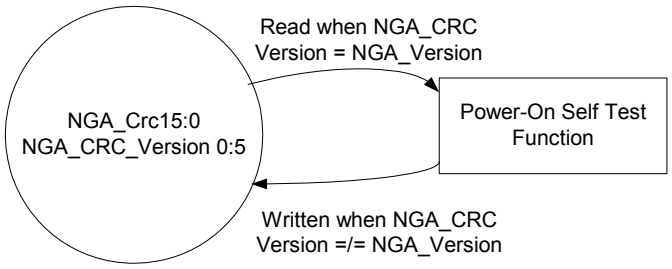

Figure 3-5: Access Capabilities of Functions over the Checksum Data Entities

3.4.2 Version Database

The Version Database shall be assigned to program memory such that data is read-only at run time and written at compile time only. (It will be updated when software update is done in the field.)

Table 3-16 lists the Version Database Fields. Figure 3-6 depicts the access capabilities of functions over the data entities. There is no relationship between the different data entities within the database.

Such that the integrity of the database can be maintained even through software version changes (modifications), the database has the following integrity constraints:

- The fields shall be mapped as stated in Table 3-15;

Table 3-15: Version Database

	Bit 7 … Bit 0
Base+0	NGA_Version0
Base+1	NGA_Version1
Base+2	NGA_Version2
Base+3	NGA_Version3
Base+4	NGA_Version4
Base+5	NGA_Version5

Table 3-16: Version Database Fields

Data Entities	Type	Notes
NGA_Version0:5	Integer	DCU Neuron Gateway Application Version. Format: 6-byte string. Valid range: each character is 0x00, and 0x20 – 0x7E.

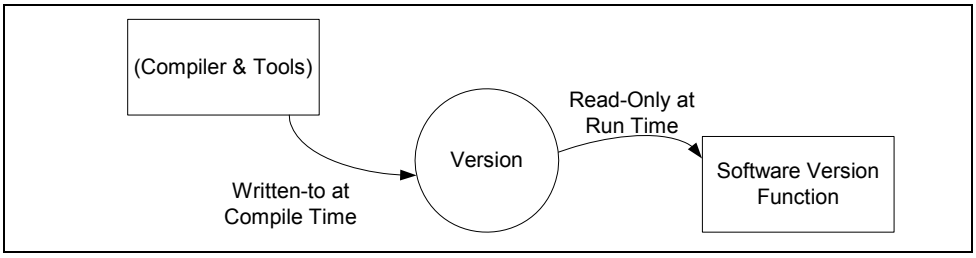

Figure 3-6: Access Capabilities of Functions over Version Data Entities

3.5 Design Constraints

3.5.1 Standards compliance

- The software design shall comply with IEEE Std. 1016-2009 requirements.
- The language, and its implementation for the selected microprocessor system, shall be commercially available in English.
- All languages and operation systems must have an acceptable customer base (widespread use).
- Compiler shall be commercially available.
- Proprietary compilers shall not be used.

.

3.5.2 Databases validation

All logical databases shall include data integrity validation by mean of CRC, checksum, or other. Each logical database shall be validated at boot-up before database access. An invalid database shall be reset.

3.6 Software System Attributes

3.6.1 Reliability

All activities specified in SVVP document 201111254 shall be performed.

All activities specified in SQAP document 201111208 section 6 (Reviews and Audits) shall be performed.

3.6.2 Availability

The Neuron Gateway Application is designed to be available at all time. In the case NGA fails or stop responding on the Car Network, its condition will be identified by the CDT. However, the DCU will maintain major door functionality and safe operation even if NGA goes down.

3.6.3 Security

This section is not applicable to this document.

3.6.4 Maintainability

The node shall accept application image (application software) uploads through the standard functionality provided by the LonTalk® protocol management functions.

3.6.5 Portability

The NGA software is not portable outside the LonWorks FT-31xx processor family. It is not portable on a different hardware implantation. The NGA software shall be implemented using the Echelon Neuron-C development tool.

APPENDIX A: DCU LOCATION

The identification bits shall be determined from the connector layout and processed to identify the location of the DCU in either A or B type car.

There are 4 distinct DCU locations on a car that have to be identified in the Table A-1. The IDENT1 and IDETN2 are discreet interface inputs of the FT3150 as seen in Figure 2-2.

Table A-1: DCU Location Definition

Node Number	Location ID String	DCU Position	IDENT1:IDENT2	Comment
17	DCU 1	TBD	TBD	-
18	DCU 2	TBD	TBD	-
19	DCU 3	TBD	TBD	-
20	DCU 4	TBD	TBD	-
127	XXXXXX	Unknown	---	Invalid position